makita 4" DISC GRINDER Model 9501B

(DISCONTINUED IN 1985)

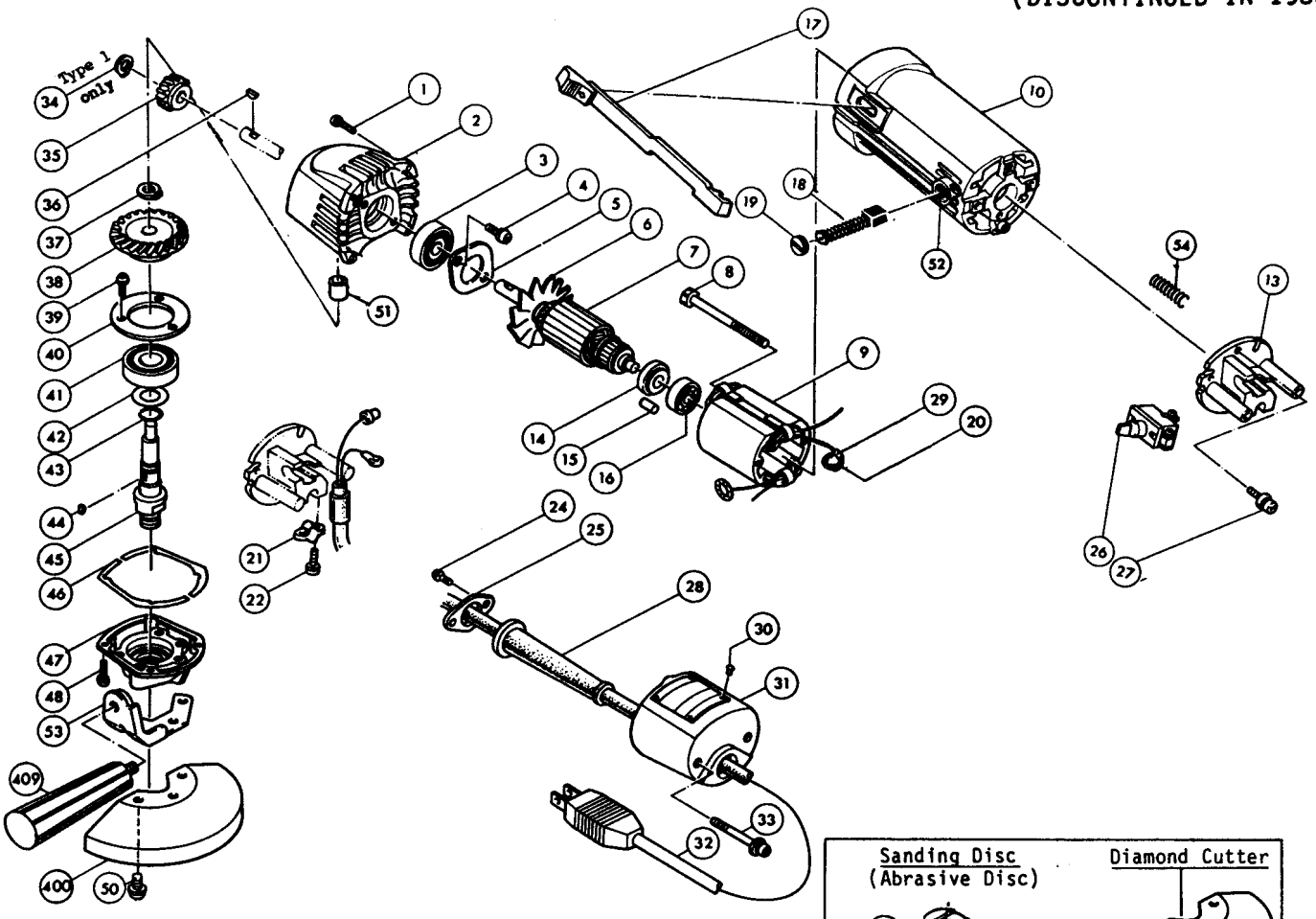

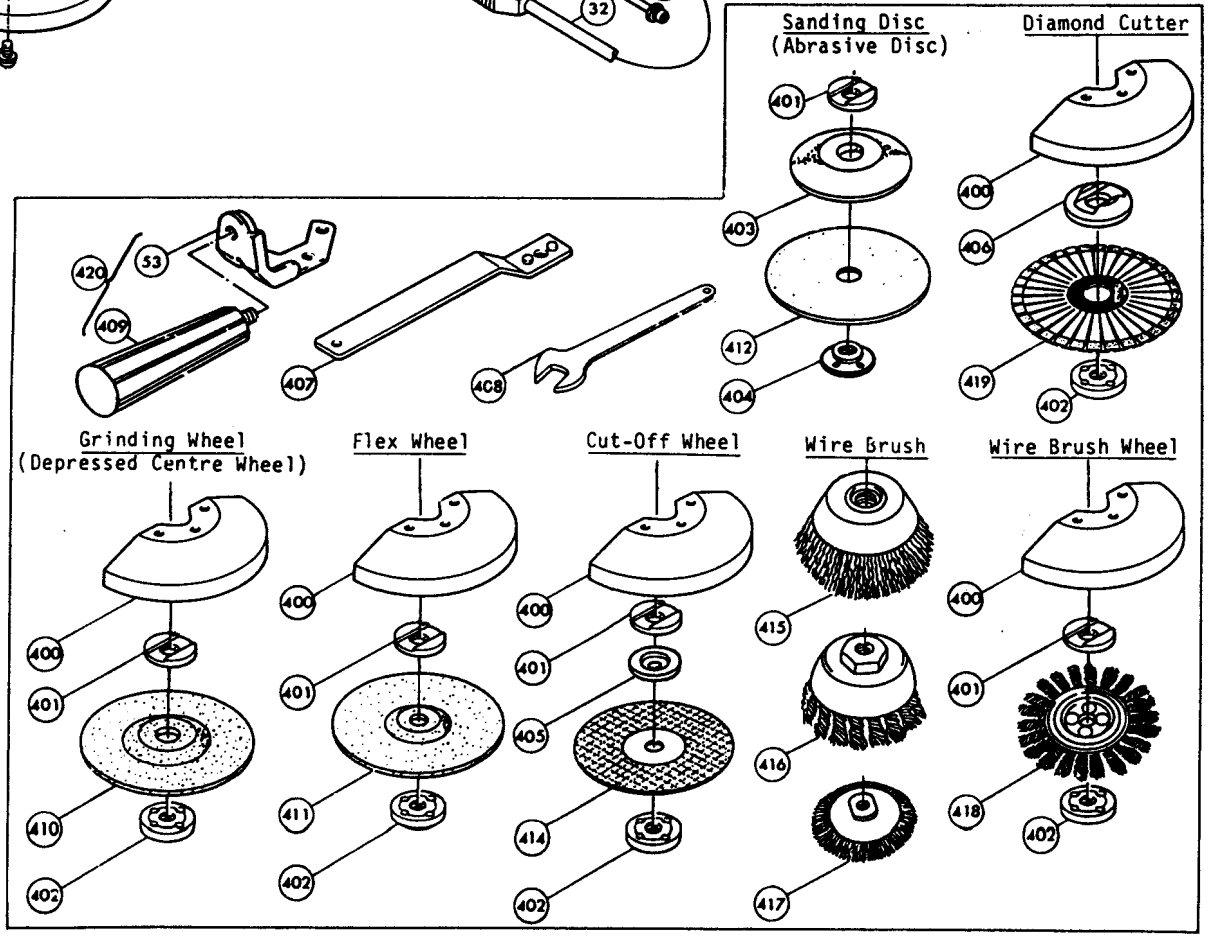

MC 8-89

Item No.	Part No.	No. Used	Description
1	911136-9	4	Pan Head Screw M4x20
2	156050-4	1	Gear Housing (With Item 51)
3	211063-3	1	Ball Bearing 6000LB
4	911216-1	2	Pan Head Screw M5x14
5	285604-1	1	Bearing Retainer 35
6	241068-9	1	Fan 60
7	611252-4	1	Armature Assembly (With Items 6, 14 & 16) *
8	925198-1	2	(+) Hex Bolt M4x70 (With Lock Washer)
9	621092-2	1	Field Assembly (With Items 20 & 29)
10	156096-0	1	Motor Housing (With Items 15 & 52)*
11	257903-1	1	Stop Ring E-2.3 (Type 2 & 3) *
12	*	1	Switch Rod
13	*	1	Switch Holder
14	*	1	Insulation Washer
15	263002-9	1	Rubber Pin 4
16	211026-9	1	Ball Bearing 627LLB (Old 211028-5 627LB)
17	*	1	Switch Lever
18	191917-9	2	Carbon Brush CB-72 (Old 181023-8 CB-52)
	181501-8	2	Auto Cut-Off Carbon Brush CB-61 (Optional)
19	643550-8	2	Brush Holder Cap 5-8
20	654018-9	2	Garter Spring
21	687002-9	1	Strain Relief
22	911121-2	2	Pan Head Screw M4x14
23	911006-2	1	Pan Head Screw M3x8 (Type 1 & 2) *
24	911106-8	2	Pan Head Screw M4x8
25	687637-6	1	Set Plate
26	*	1	Switch
27	911133-5	2	Pan Head Screw M4x18
28	682502-4	1	Cord Guard 8-85
29	654501-6	2	Solderless Connector P-1.25
30	953106-2	4	Rivet 0-5
31	411218-2	1	Rear Cover
32	664013-1	1	Cord With Plug 2P-18-2.5
33	911188-0	2	Pan Head Screw M4x60 (With Washer)
34	961004-6	1	Retaining Ring S-8 (Type 1 Only)
35	221229-7	1	Spiral Bevel Gear 15
36	254002-0	1	Woodruff Key 3
37	961006-2	1	Retaining Ring S-10
38	221232-8	1	Spiral Bevel Gear 35
39	911121-2	3	Pan Head Screw M4x14
40	285616-4	1	Bearing Retainer 40
41	211106-1	1	Ball Bearing 6201LLB
42	253055-6	1	Flat Washer 12
43	213255-0	1	O Ring 18
44	254002-0	1	Woodruff Key 3
45	325329-6	1	Spindle M10x1.25
46	341262-4	AR	Shim
47	312629-3	1	Bearing Box
48	911121-2	4	Pan Head Screw M4x14
49	912854-1	1	Countersunk Head Screw M2.6x8 (Type 1) *
50	911221-8	3	Pan Head Screw M5x16
51	214006-4	1	Plane Bearing 6
52	643557-4	2	Brush Holder 5-8
53	164329-9	1	Grip Holder
54	231223-1	1	Compression Spring 6
100	652008-6	2-4	(+) Pan Head Screw M3.5x7 (With Washer)
101	652250-9	2-4	Clamp Washer
102	654037-5	2-4	Insulated Eye Terminals FV1.25-M3
103	654509-0	1	Closed End Connector 2-SD
104	652021-4	4	Screw No. 5-40 UNCx5

Accessories

400	343108-0	1	4" Wheel Guard
401	224030-9	1	Inner Flange 30 (For Depressed Center Wheel)
402	224503-2	1	Lock Nut 10-30 (For Depressed Center Wheel, Cut-off Wheel & Diamond Cutter)
403	743009-6	1	Rubber Pad 76 (For Abrasive Disc)
404	224501-6	1	Lock Nut 10-30 (For Abrasive Disc)
405	224046-4	1	Inner Flange (For Cut-Off Wheel)
406	224146-0	1	Inner Flange (For Diamond Cutter)
407	782401-1	1	Lock Nut Wrench 20
408	781007-2	1	Wrench 14 (For Spindle)
409	273401-7	1	Side Handle 32
410	----	1	4" Depressed Centre Wheel (See Catalogue for Details)
411	794229-5	1	4" Flex Wheel (Grit 60)
	794231-8	1	4" Flex Wheel (Grit 80)
	794232-6	1	4" Flex Wheel (Grit 120)
412	----	1	4" Abrasive Disc (See Catalogue for Details)
414	724104-1	1	4" Abrasive Cut-Off Wheel (Grit C36)
	724107-5	1	4" Abrasive Cut-Off Wheel (Grit A36)
415	743201-4	1	3" Wire Cup Brush
416	743201-5A	1	2-3/4" Knot Type Wire Cup Brush
417	794163-9	1	3-3/8" Wire Bevel Brush
418	743203-4A	1	4" Wire Brush Wheel
	743203-4B	1	4" Wire Brush Wheel
419	724901-0A	1	4-1/8" Diamond Cutter (SD Type)
	724901-0B	1	4-1/8" Diamond Cutter (SE Type)
420	191081-6	1	Side Handle Assembly (Assembled Items 53 & 409)

AR AS REQUIRES
* SEE SERVICE CHANGE

WIRING DIAGRAM

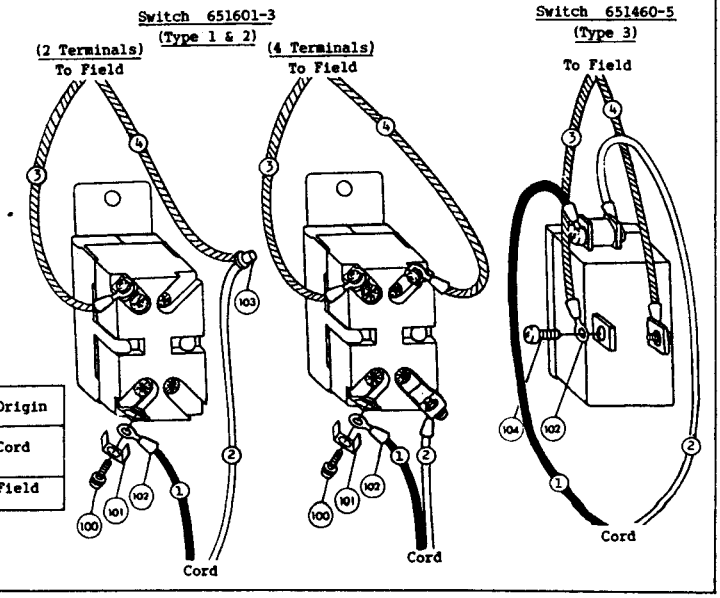

Wire No.	Wire Colour	Origin
1	Black	Cord
2	White	
3 & 4	Blue	Field