Makita 10" MITRE SAW Model LS1020

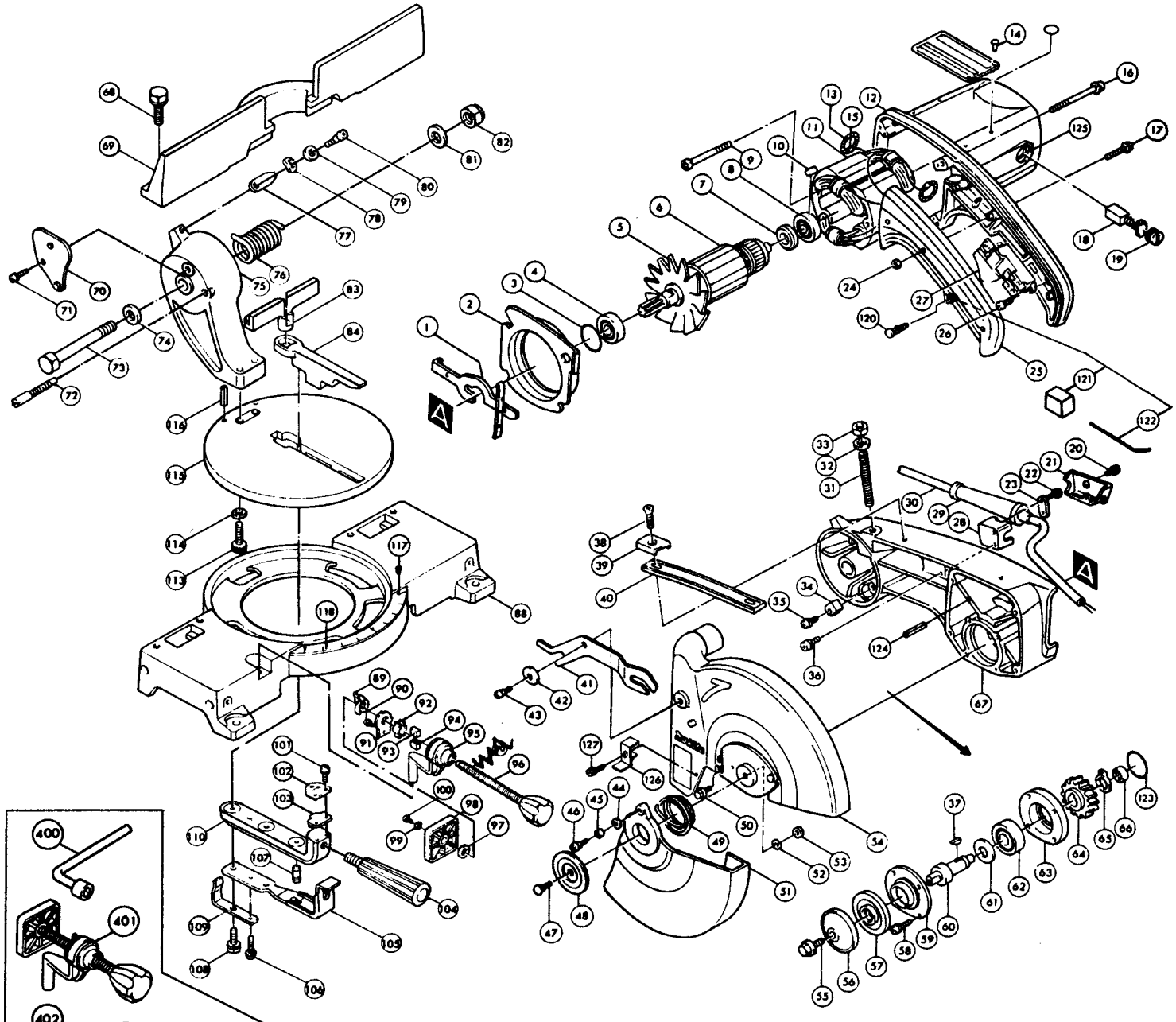

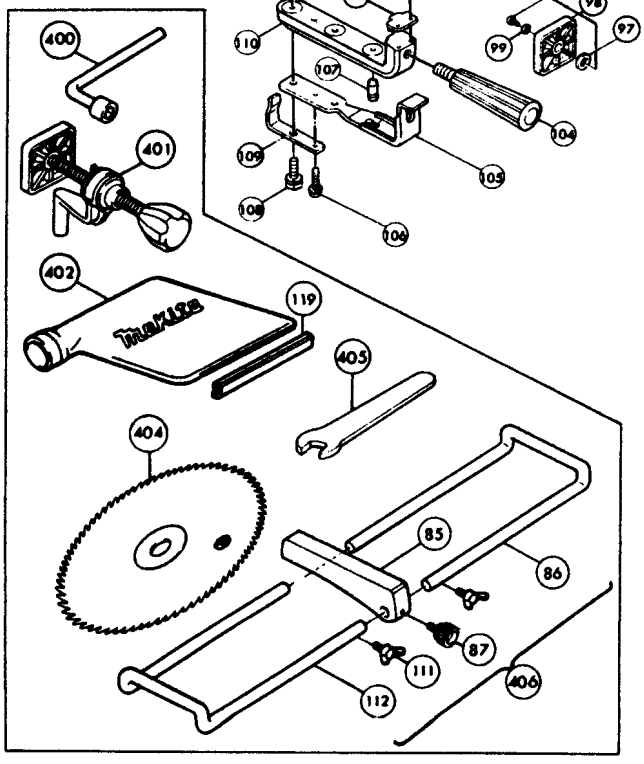

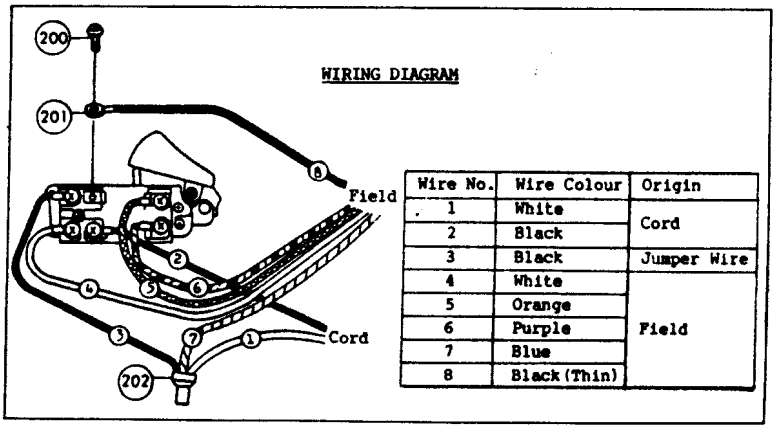

Wire No.	Wire Colour	Origin
1	White	Cord
2	Black	
3	Black	Jumper Wire
4	White	Field
5	Orange	
6	Purple	
7	Blue	
8	Black (Thin)	

Item No.	Part No.	No. Used	Description
1	163100-8	1	Shaft Lock
2	411466-3	1	Baffle Plate
3	213459-4	1	O Ring 32
4	211106-1	1	Ball Bearing 6201LLB
5	241048-5	1	Fan 92
6	514816-2	1	Armature Assembly (Includes Items 5, 7 & 8)
7	681623-9	1	Insulation Washer
8	211068-3	1	Ball Bearing 6200LB
9	925288-0	2	(+) Hex Bolt M5x65 (With Washer)
10	263002-9	1	Rubber Pin 4
11	524776-0	1	Field Assembly (With Items 13 & 15)
12	157696-9	1	Motor Housing (With Items 10, 122 & 125)
13	654020-2	2	Garter Spring
14	953106-2	4	Rivet 0-5
15	654502-4	2	Solderless Connector P-2
16	251335-4	4	(+) Pan Head Screw M5x80 (With Washer)
17	911158-9	3	Pan Head Screw M4x30 (With Washer)
18	181047-4	2	Carbon Brush CB-154
	181506-8	2	Auto Cut-Off Carbon Brush CB-157 (Optional)
19	643650-4	2	Brush Holder Cap 6.5-13.5
20	911128-8	2	Pan Head Screw M4x16 (With Washer)
21	411467-1	1	Clamp Cover
22	911133-5	2	Pan Head Screw M4x18 (With Washer)
23	687001-1	1	Strain Relief
24	931102-0	3	Hex Nut M4
25	410875-3	1	Handle Cover (With Item 24)
26	911101-8	1	Pan Head Screw M4x6 (With Washer)
27	651115-2	1	Switch
28	411468-9	1	Clamp Base
29	682505-8	1	Cord Guard 10-90
30	664213-3	1	Cord With Plug 2P-16-2.5
31	251953-8	1	Screw M10x70
32	941252-3	1	Flat Washer 10
33	931501-6	1	Hex Nut M10
34	421328-7	1	Cushion
35	911239-9	1	Pan Head Screw M5x22 (With Washer)
36	911121-2	2	Pan Head Screw M4x14 (With Washer)
37	254203-0	1	Key 4
38	912327-5	2	Countersunk Head Screw M6x18
39	342968-7	2	Band Holder
40	410723-6	1	Carrying Band
41	343465-6	1	Guide Arm
42	253022-1	1	Flat Washer 8
43	251331-2	1	(+) Pan Head Screw M6
44	253715-0	1	Flat Washer 6
45	257143-1	1	Ring 8
46	251331-2	1	(+) Pan Head Screw M6
47	923901-4	1	Cap Square Neck Bolt M5x8
48	342971-8	1	Plate
49	231933-0	1	Spring 26
50	265324-3	1	Hex Flange Head Bolt M8x12
51	414032-5	1	Safety Cover
52	942101-7	1	Spring Washer 5
53	931202-6	1	Hex Nut M5
54	151289-4	1	Blade Case Complete
55	251637-8	1	Hex Bolt M8x20
56	224118-5	1	5/8" Outer Flange 55
57	224241-6	1	5/8" Inner Flange 55
58	911231-5	4	Pan Head Screw M5x20 (With Washer)
59	285660-1	1	Bearing Retainer 71
60	321922-4	1	Spindle
61	253328-7	1	Thin Washer 17
62	211256-2	1	Ball Bearing 6203LLB
63	312982-7	1	Bearing Box
64	221695-8	1	Helical Gear 41
65	961057-5	1	Retaining Ring S-17
66	212101-4	1	Needle Bearing 1210
67	157855-5	1	Gear Housing Complete (With Items 123 & 124)
68	921541-2	4	Hex Bolt M10x25 (With Washer)
69	315888-8	1	Guide Fence
70	163271-1	1	Supporter
71	911321-4	1	Pan Head Screw M6x16 (With Washer)
72	251954-6	1	Set Screw M10
73	251698-8	1	Hex Bolt M16
74	253771-0	1	Flat Washer 16
75	154354-8	1	Arm Complete (Includes Item 116)
76	231530-2	1	Torsion Spring 32
77	341511-9	1	Handle Latch
78	253948-7	1	Wave Washer 8
79	253309-1	1	Thin Washer 8
80	251267-5	1	(+) Pan Head Screw M6
81	253771-0	1	Flat Washer 16
82	252044-8	1	Hex Nut M16-24
83	410705-8	1	Fence Plate (Chip Deflector)
84	410704-0	1	Kerf Board
85	312511-6	1	Set Plate
86	321790-5	1	Holder
87	251804-5	1	Screw M6x12
88	151223-4	1	Base Complete
89	341912-1	1	Nut Holder
90	911216-1	1	Pan Head Screw M5x14 (With Washer)
91	342967-9	1	Set Plate
92	341911-3	2	Protecter
93	321490-7	1	Release Nut (R)
94	321491-5	1	Release Nut (L)
95	151253-5	1	Vice Arm Complete
96	271272-6	1	Knob 45
97	253744-3	1	Flat Washer 12
98	315891-9	1	Vice Plate
99	253047-5	1	Flat Washer 6
100	911317-5	1	Pan Head Screw M6x14
101	911108-4	2	Pan Head Screw M4x8 (With Washer)
102	816657-5	1	Indication Label
103	342823-3	1	Plate
104	273481-3	1	Grip 32
105	342824-1	1	Latch Spring
106	911246-2	1	Pan Head Screw M5x28 (With Washer)
107	321789-0	1	Latch Pin
108	921441-6	1	Hex Bolt M8x25 (With Washer)
109	232091-5	1	Leaf Stay
110	311772-5	1	Turning Stay
111	924311-8	2	Wing Bolt M6x12
112	321790-5	1	Holder
113	922457-4	2	Hex Socket Head Bolt M8x35
114	942201-3	2	Spring Washer 8
115	311788-0	1	Turn Base
116	951113-9	2	Spring Pin 4-18
117	953206-8	3	Rivet 2-5
118	816174-5	1	Mitre Scale Plate
119	410602-8	1	Fastener
120	411478-6	1	Lock-Off Button
121	411477-8	1	Stopper
122	231531-0	1	Torsion Spring
123	213459-4	1	O Ring 32
124	951157-9	2	Spring Pin 5-16
125	643653-8	2	Brush Holder 6.5-13.5
126	343492-3	2	Blade Stopper
127	911206-4	2	Pan Head Screw M5x10
200	652014-1	6	Pan Head Screw M4x8 (With Washer)
201	654038-3	6	Insulated Eye Terminal FV1.25-M4
202	654510-5	1	Closed End Connector 5.5-SD

Accessories

400	782212-4	1	Socket Wrench 13
401	134363-3	1	Vice Assmebly (Assembled Items 89-100)
402	122351-2	1	Dust Bag Assembly (With Item 119)
404	----	1	Saw Blade (See Catalogue for Details)
405	781203-2	1	Open End Wrench
406	191550-7	1	Holder Set (Includes Items 85-87, 111 & 112)