Makita Canada Inc.

makita

2.0 HP ROUTER SINGLE SPEED D-HANDLE
Model RD1100(MCA)

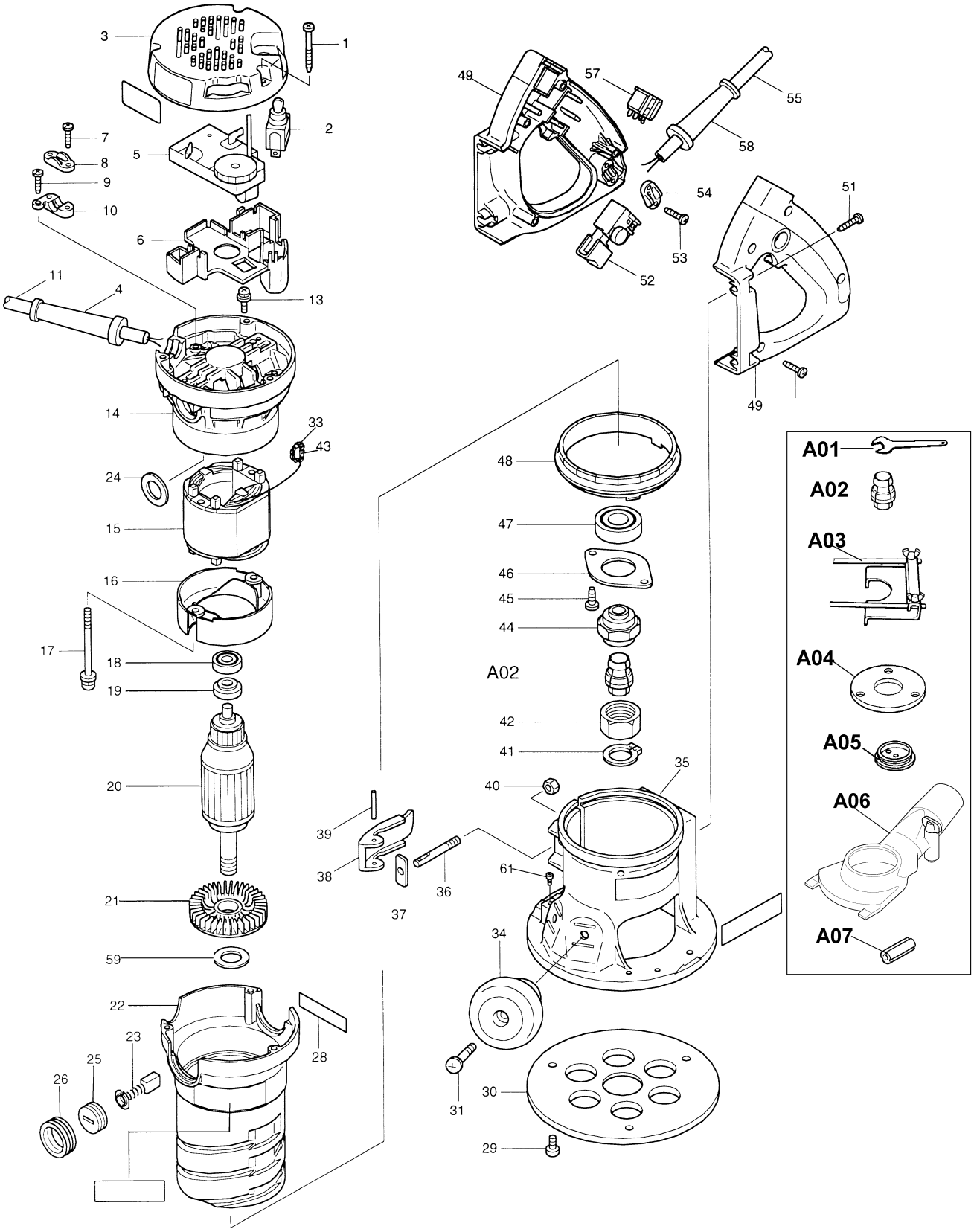

02-2004

WIRING DIAGRAM

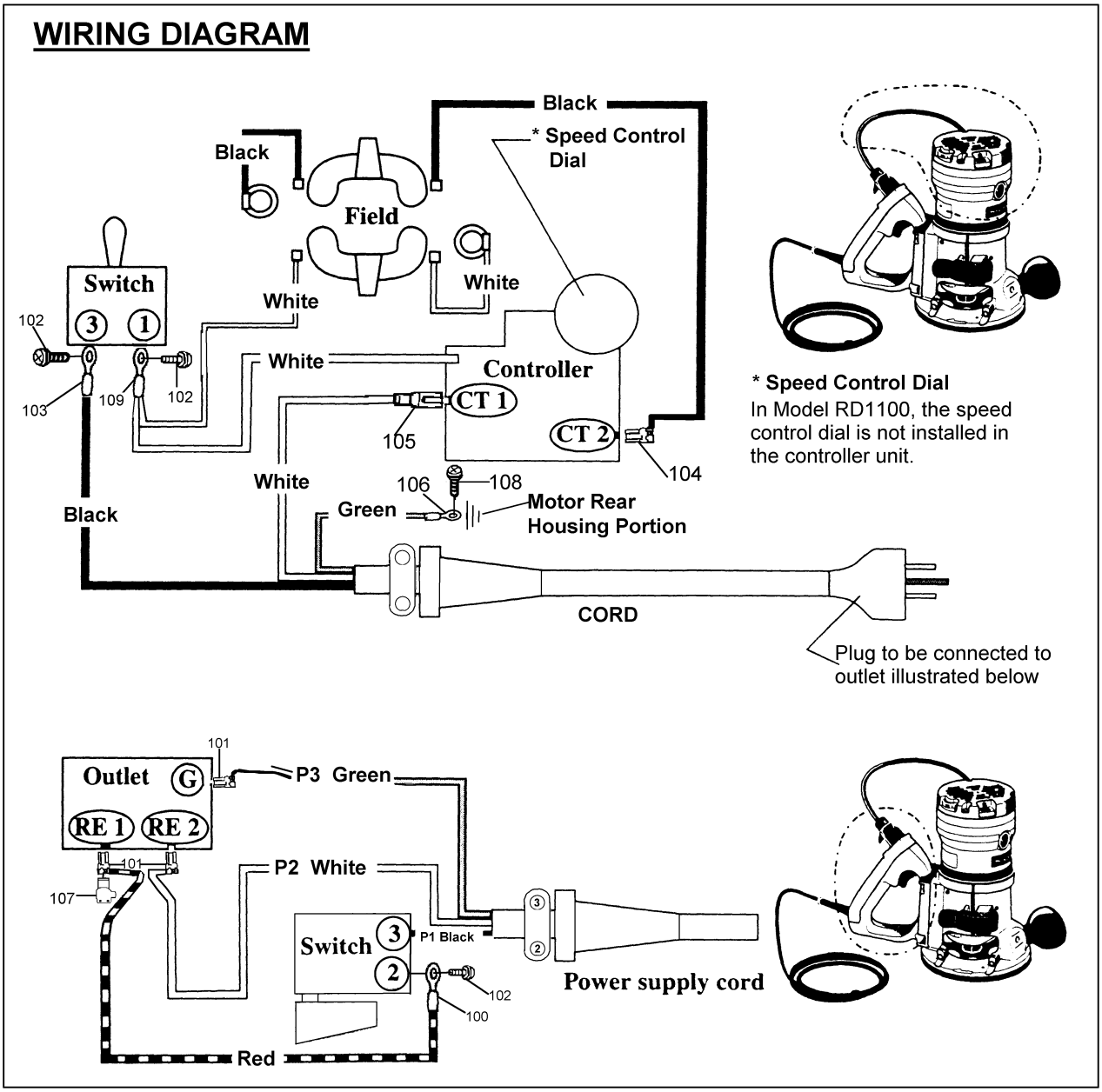

Item No.	Part No.	No. Used	Description	Item No.	Part No.	No. Used	Description
1	266203-8	3	Tapping Screw Bind CT 4X40	17	911686-4	2	P. H. Screw M5X65
2	651423-1	1	Switch	18	210005-4	1	Ball Bearing 608DDW
3	417139-6	1	Rear Cover	19	681650-6	1	Insulation Washer
4	682505-8	1	Cord Guard 10-90	20	**518633-2**	1	Armature Assy (Includes Items 18, 19 & 21)
5	631398-0	1	Controller				
6	417143-5	1	Controller Holder	21	240031-9	1	Fan 60
7	265995-6	2	Tapping Screw 4X18	22	317319-3	1	Motor Housing
8	687052-4	1	Strain Relief	23	191963-2	2	Carbon Brush CB-303 (2pcs/Set)
9	266034-5	1	Tapping Screw CT 4X16	24	681009-7	2	Washer
10	687100-9	1	Strain Relief	25	643750-0	2	Brush Holder Cap
11	565055-7	1	Cord With 3P-16-0.7(Includes Item 4, 100, 105 & 106)	26	681655-6	2	Holder Ring
				28	817365-1	1	Caution Label (CA)
13	652014-1	1	P. H. Screw M4X8	29	265081-3	3	+ P.H.Screw W3/16-24X10
14	151879-3	1	Motor Rear Housing Com. (Includes 2x643708-9 - Brush Holder 5-11)	30	417138-8	1	Base Plate
		2		31	911378-5	1	P. H. Screw M6X55
15	594356-6	1	Field Assy (Includes Items 33, 43 & 104)	33	654020-2	1	Garter Spring
				34	271313-8	1	Knob 55
16	417136-2	1	Baffle Plate				

Item No.	Part No.	No. Used	Description
35	151881-6	1	Router Base Com.
	193104-6	1	D-Handle Base Set [Includes Items 29 - 31, 34 - 40, 48 - 55, 57, 58 & 102(2pcs)]
36	323968-6	1	Support Pin
37	344852-2	1	Plate
38	344851-4	1	Lock Lever
39	268063-4	1	Pin 4
40	252014-7	1	Hex. Lock Nut M6-10
41	961056-7	1	Retaining Ring S-16
42	763642-8	1	Collet Nut
43	654501-6	2	Connector P-1.25
44	763641-0	1	Collet Body
45	266035-3	2	Tapping Screw Bind CT 5X12
46	285689-7	1	Bearing Retainer 55
47	211228-7	1	Ball Bearing 6202DDW
48	417137-0	1	Scale Ring
49	183218-9	1	Handle Set
50	265995-6	4	Tapping Screw 4X18
51	266036-1	4	Tapping Screw Bind CT 5X20
52	651284-9	1	Switch SGEL115CDY-6
53	265995-6	2	Tapping Screw 4X18
54	687052-4	1	Strain Relief
55	565054-9	1	Cord With Plug 3P-16-2.8
57	655116-2	1	Outlet
58	682505-8	1	Cord Guard 10-90
59	253853-8	1	Flat Washer 15
60	534044-3	1	Lead Assy
61	**922212-4**	2	H.S.H. Bolt M5X12

Item No.	Part No.	No. Used	Description
100	654037-5	1	Insulating Eye Terminal
101	654086-2	3	Receptacle
102	652008-6	4	P.H. Screw M3.5X7
103	654037-5	1	Insulating Eye Terminal
104	654069-2	1	Receptacle
105	654110-1	1	Insulating Terminal
106	654113-5	1	Terminal R1.25-3.5
107	686015-7	1	Receptacle Sleeve
108	652014-1	1	P.H. Screw M4X8
109	654198-1	1	Insulated Terminal

Accessories

A01	781031-5	2	Wrench 27 (Unpackaged)
	193234-3	2	Wrench 27 (Packaged)
A02	193214-9	1	Collet Cone ¼" (6.35)
	193215-7	1	Collet Cone ½" (12.7)
A03	**193073-1**	1	Straight Guide
A04	**193155-9**	1	Clear Base Plate(2-1/2" Hole)
A05	- - - - -	1	Templet Guide (See Catalogue for Details)
A06	**193379-7**	1	Dust Nozzle Set (To be connected to any Makita Vacuums with Hose) (Includes Thumb Screw M5X37 - 265746-7)
A07	**763805-6**	1	Collet Sleeve ½" -> 3/8"